BOX DOWNSPOUT
+ ACCESSORIES

RESET FORM | SAVE FORM | EMAIL FORM

BOX DOWNSPOUT

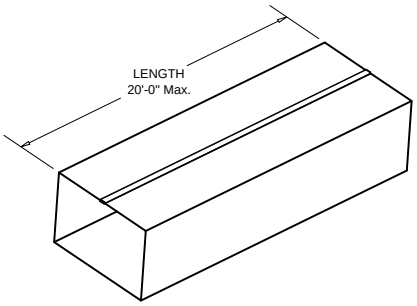

A STYLE ELBOW

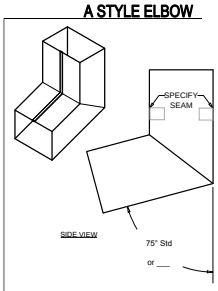

OUTLET TUBES

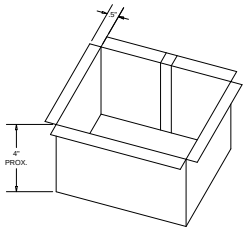

B STYLE ELBOW

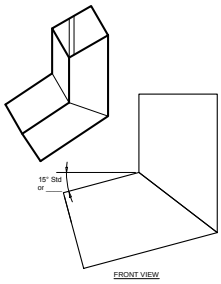

DOWNSPOUT STRAPS

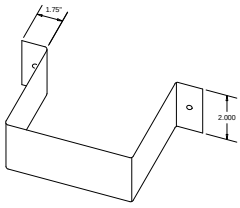

*DOWNSPOUT SIZE

*For accurate pricing, please fill out the dimensions below:

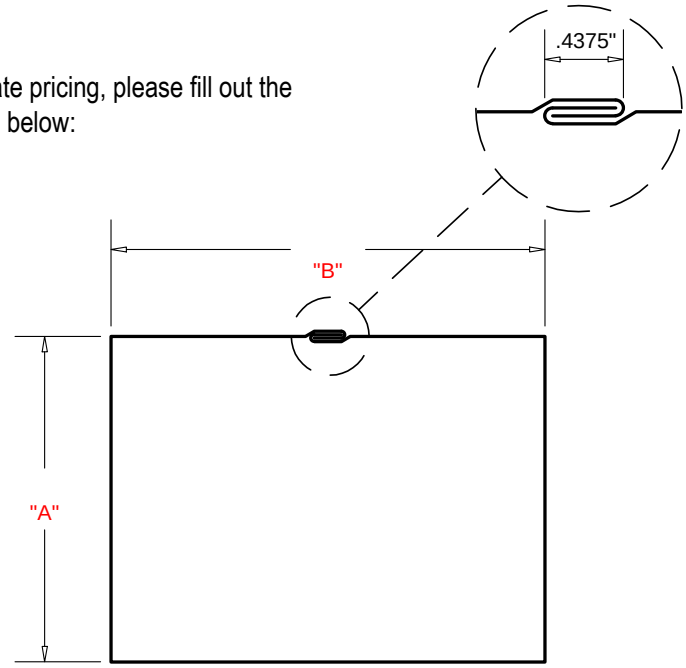

ONE-PIECE OFFSETS

"UP" STYLE (EAVE) | "DOWN" STYLE (LEDGE)

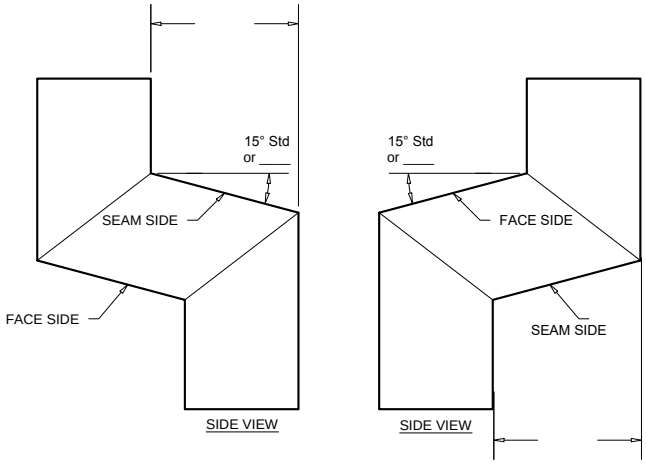

QUANTITIES:

_____ TOTAL FEET OF DOWNSPOUT _____REQUESTED LENGTH PER PIECE

_____ OUTLET TUBES

_____ ELBOWS (STD. 75°)
STYLE A:_____ ☐ SEAM LONG SIDE ☐ SEAM SHORT SIDE STYLE B:_____ ☐ LEFT TURN ☐ RIGHT TURN

_____ ELBOWS (CUSTOM DEGREE) _____°
STYLE A:_____ ☐ SEAM LONG SIDE ☐ SEAM SHORT SIDE STYLE B:_____ ☐ LEFT TURN ☐ RIGHT TURN

_____ ONE-PIECE OFFSETS _____" OFFSET AMOUNT
STYLE A:_____ ☐ EAVE ☐ LEDGE STYLE B:_____ ☐ LEFT TURN ☐ RIGHT TURN

_____ STRAPS (STANDARD =2 PER 10' DOWNSPOUT)

MATERIAL

☐ 24GA STEEL ☐ .032 ALUMINUM
☐ 26GA STEEL

COLOR:

PRINT APPROVED BY:

_____ (SIGNATURE) _____ (DATE)

A SIGNED PRINT APPROVAL SIGNIFIES A CUSTOMER HAS VERIFIED ALL DIMENSIONS, SIZES, QUANTITIES, AND MATERIAL TYPES.

FABRICATION WILL PROCEED ONLY AFTER RECEIPT OF SIGNED PRINT APPROVAL

GulfCoast SUPPLY & MANUFACTURING
METAL ROOFING PRODUCTS

https://store.gulfcoastsupply.com/ Telephone: 352-498-0778

COLLECTOR BOX & TRANSITION

COLLECTOR BOX

QUANTITY _____

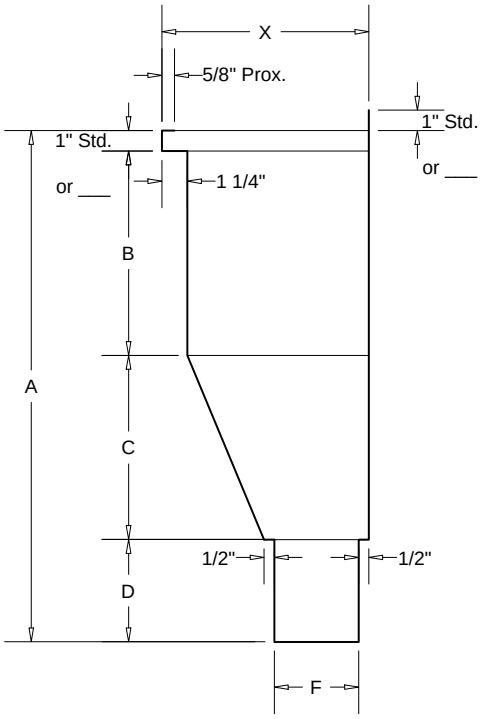

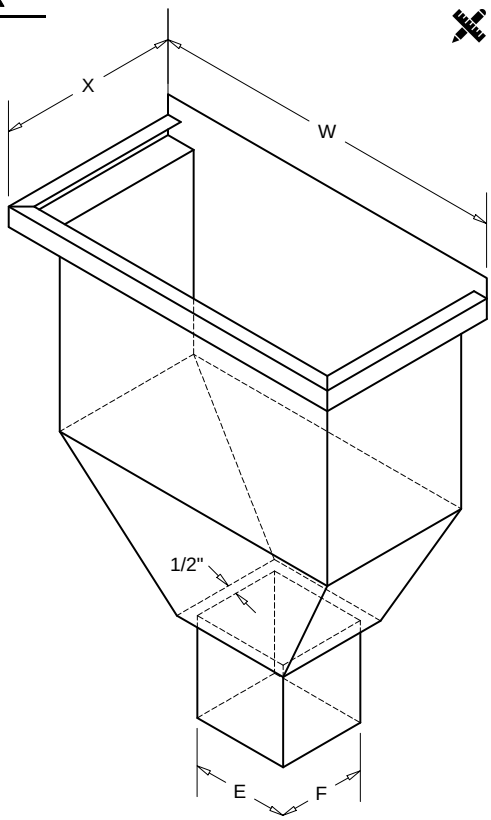

SIZES

A = _____

B = _____

C = _____

D = _____

E = _____

F = _____

W = _____

X = _____

TRANSITION

MATERIAL

☐ 24GA STEEL
☐ 26GA STEEL
☐ .032 ALUMINUM

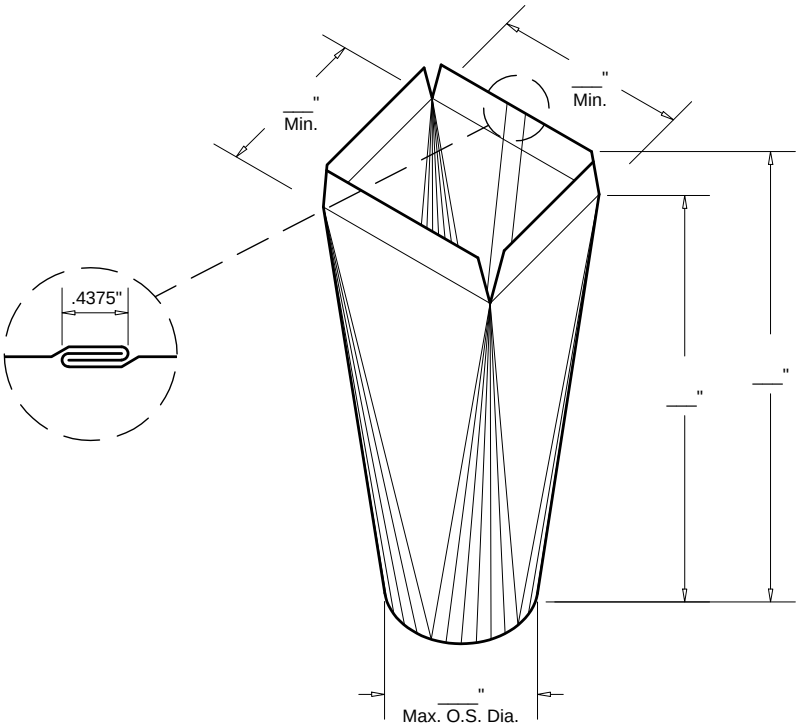

COLOR:

QUANTITY _____

RESET FORM | SAVE FORM | EMAIL FORM

PRINT APPROVED BY:

_____ (SIGNATURE) _____ (DATE)

A SIGNED PRINT APPROVAL SIGNIFIES A CUSTOMER HAS VERIFIED ALL DIMENSIONS, SIZES, QUANTITIES, AND MATERIAL TYPES.

FABRICATION WILL PROCEED ONLY AFTER RECEIPT OF SIGNED PRINT APPROVAL

GulfCoast SUPPLY & MANUFACTURING
METAL ROOFING PRODUCTS
https://store.gulfcoastsupply.com/
Telephone: 352-498-0778